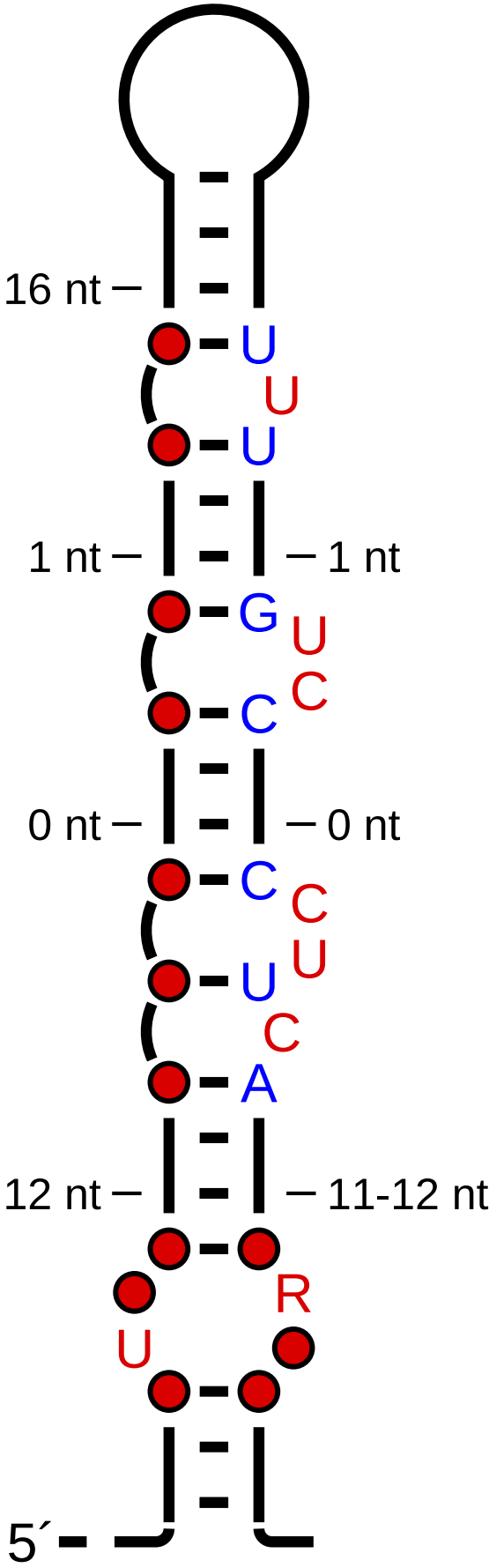
16 nt
U
U
U
1 nt
1 nt
G
U
C
C
0 nt
0 nt
C
C
U
U
C
A
12 nt
11-12 nt
R
U
5´